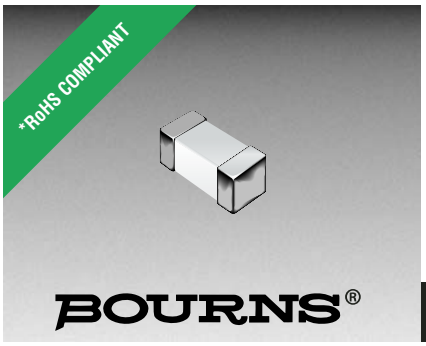

Features

- 0402 size
- Available in E12 Series
- High frequency
- Nickel barrier
- Lead free

Applications

- Mobil phones
- Cellular phones
- CTV, VCR, HIC, FDD
- Automotive electronics

CI100505 Series - Multi-Layer Chip Inductors

Electrical Specifications

Bourns Part No.	Inductance		Q min. MHz			SRF MHz		DCR	I rms
	nH	Tol. %	100	800	1600	min.	typ.	ohm max.	mA max.
CI100505-1N0D	1.0	±0.3 nH	8	20	26	6000	13000	0.10	300
CI100505-1N2D	1.2	±0.3 nH	8	20	26	6000	10000	0.10	300
CI100505-1N5D	1.5	±0.3 nH	8	20	30	6000	10000	0.10	300
CI100505-1N8D	1.8	±0.3 nH	8	22	35	6000	9500	0.12	300
CI100505-2N2D	2.2	±0.3 nH	8	22	35	6000	9000	0.16	300
CI100505-2N7D	2.7	±0.3 nH	8	22	35	6000	9000	0.20	300
CI100505-3N3D	3.3	±0.3 nH	8	22	35	6000	8000	0.22	300
CI100505-3N9D	3.9	±0.3 nH	8	22	30	4000	6500	0.25	300
CI100505-4N7D	4.7	±0.3 nH	8	22	30	4000	5000	0.28	300
CI100505-5N6D	5.6	±0.3 nH	8	22	28	4000	5000	0.29	300
CI100505-6N8J	6.8	±5	8	22	28	3900	4400	0.35	300
CI100505-8N2J	8.2	±5	8	20	28	3600	4000	0.40	250
CI100505-10NJ	10	±5	8	20	24	3200	3500	0.45	250
CI100505-12NJ	12	±5	8	20	24	2700	3500	0.50	200
CI100505-15NJ	15	±5	8	20	20	2300	3000	0.55	200
CI100505-18NJ	18	±5	8	20	15	2100	2600	0.65	200
CI100505-22NJ	22	±5	8	20	13	1900	2200	0.80	200
CI100505-27NJ	27	±5	8	17	—	1600	1900	0.90	200
CI100505-33NJ	33	±5	8	16	—	1300	1700	1.10	200
CI100505-39NJ	39	±5	8	16	—	1200	1600	1.20	100
CI100505-47NJ	47	±5	8	10	—	1000	1300	1.30	100
CI100505-56NJ	56	±5	8	—	—	750	900	1.40	100
CI100505-68NJ	68	±5	8	—	—	700	800	1.40	100
CI100505-82NJ	82	±5	8	—	—	600	700	1.60	100
CI100505-R10J	100	±5	8	—	—	550	650	2.00	100

Packaging Specifications

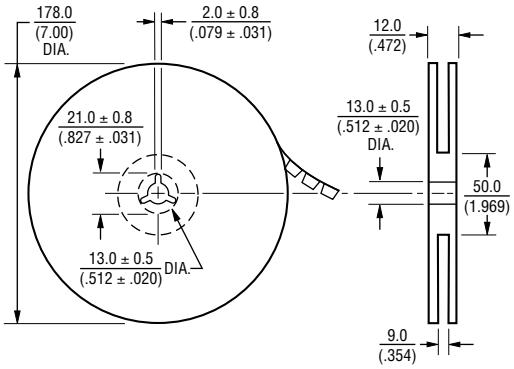

General Specifications

Temperature Rise
.....20 °C max. at rated current
Operating Temperature .-55 °C to +125 °C
Storage Temperature..-55 °C to +125 °C
Reflow Soldering ...230 °C, 50 sec. max.
Resistance to Soldering Heat
.....260 °C, 10 seconds

Materials

Base Material .....Ceramic
Terminal.....Ag/Ni/Sn
Packaging.....10,000 pcs. per reel

Product Dimensions

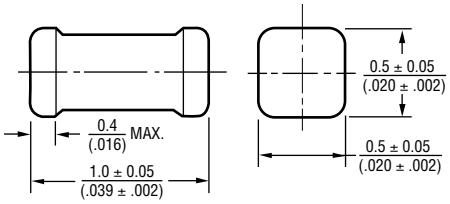

DIMENSIONS: MM / (INCHES)

Recommended Layout

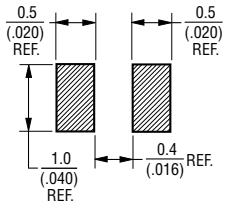

*RoHS Directive 2002/95/EC Jan 27 2003 including Annex
Specifications are subject to change without notice.
Customers should verify actual device performance in their specific applications.

Electrical Specifications

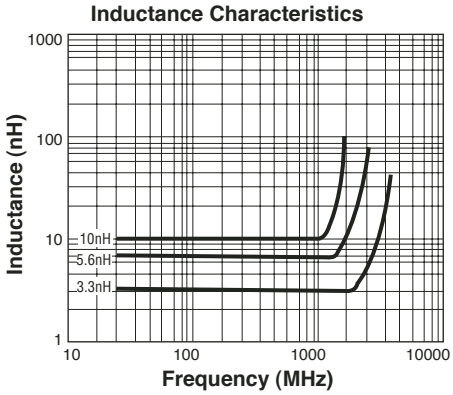

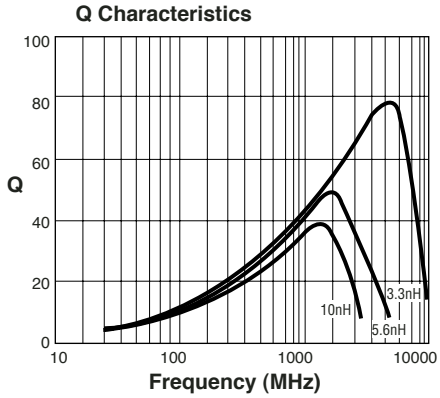

Specifications are subject to change without notice.
Customers should verify actual device performance in their specific applications.